(21 THRU 25)

NOTE:
1. REFER TO GABLE END TRUSS DETAIL 2/SD3.0 FOR ALL INFO. NOT SHOWN
2. DETAIL ONLY REQUIRED IF SPECIFIED ON TRUSS CALCULATIONS

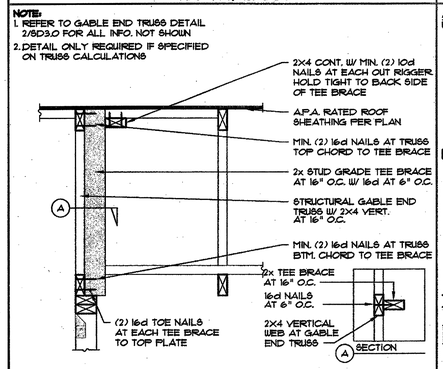

GABLE END WALL AT HEIGHTS GREATER THAN 5'-5" — SCALE: NTS — 21

(16 THRU 20)

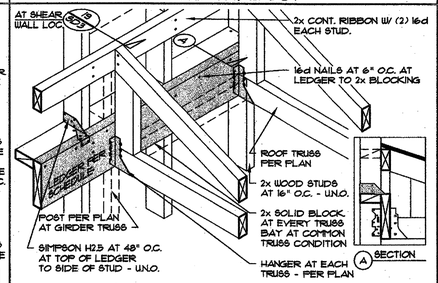

LEDGER SIZE AND CONNECTION

TRUSS SPAN	ROOF	DECK
0'-0" - 10'-0"	2x8 CONT. WOOD LEDGER W/ (3) 16d NAILS AT EACH STUD	2x8 CONT. WOOD LEDGER W/ (3) 16d NAILS AT EACH STUD
10'-0" - 15'-0"	2x8 CONT. WOOD LEDGER W/ (4) 16d NAILS AT EACH STUD	2x8 CONT. WOOD LEDGER W/ (4) 16d NAILS AT EACH STUD
15'-0" - 18'-0" MAX.	2x8 CONT. WOOD LEDGER W/ (4) 16d NAILS AT EACH STUD W/ SIMPSON A35 AT EA. STUD	(4) SIMPSON A35 AT EA. STUD
		N/A

NOTE:
USE DOUBLE STUDS & SIMP. CS16x18" STRAP AT LEDGER SPLICE. AT GIRDER TRUSS TO LEDGER CONDITION, REFER TO PLAN FOR BUILT UP POST BEHIND LEDGER.

TRUSS TO LEDGER TO WALL — SCALE: 1" = 1'-0" — REV-06-03 BAI — BAI NO.: SPR9814Z — 16

(11 THRU 15)

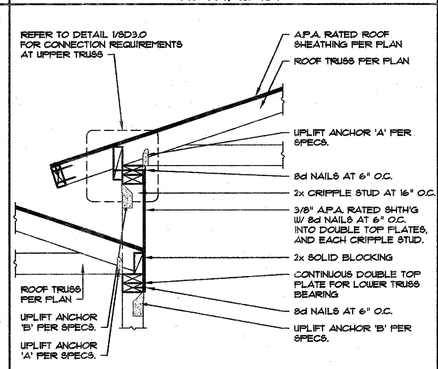

TRUSS/TRUSS AT ENTRY PARALLEL — SCALE: 1" = 1'-0" — REV-06-03 BAI — BAI NO.: SPR9811AZ — 11

(6 THRU 10)

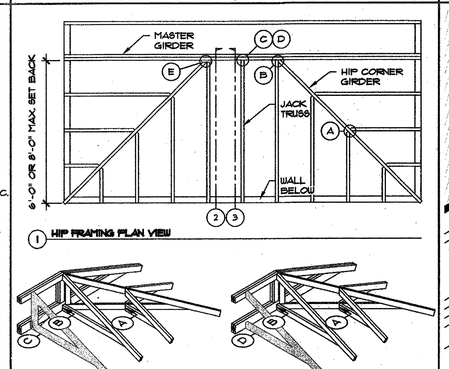

CONNECTION SCHEDULE

CONNECTION	MASTER GIRDER BTM. CHORD CONDITION	0'-0" - 6'-0" SET BACK	6'-1" - 8'-0" SET BACK
A	N/A	(3) 16d NAILS AT TOP CHORD TO TOP CHORD (3) 16d NAILS AT BTM. CHORD TO BTM. CHORD	(3) 16d NAILS AT TOP CHORD TO TOP CHORD (3) 16d NAILS AT BTM. CHORD TO BTM. CHORD
B	SINGLE 2x6	SIMPSON LTH2 OR THA26 W/ 10d X 1 1/2" NAILS	SIMPSON LTH2 OR THA26 W/ 10d X 1 1/2" NAILS
	DOUBLE 2x6	SIMPSON LTH2 OR THA26 W/ 16d NAILS	SIMPSON LTH2 OR THA26 W/ 16d NAILS
C	SINGLE OR DOUBLE 2x4 OR 2x6	(3) 16d NAILS AT TOP CHORD TO TOP CHORD SIMPSON LUS24 AT BTM. CHORD TO BTM. CHORD	(3) 16d NAILS AT TOP CHORD TO TOP CHORD SIMPSON LUS24 AT BTM. CHORD TO BTM. CHORD
D	SINGLE OR DOUBLE 2x4 OR 2x6	(3) 16d NAILS AT TOP CHORD TO TOP CHORD (3) 16d NAILS AT BTM. CHORD TO BTM. CHORD	(3) 16d NAILS AT TOP CHORD TO TOP CHORD (3) 16d NAILS AT BTM. CHORD TO BTM. CHORD
E	N/A	AT HIP CORNER GIRDER AND JACK USE (4) 16d NAILS AT TOP CHORD AND (4) 16d NAILS AT BOT. CHORD (3 TOE NAILS AND 3 BACK NAILS). REFER TO SECTION AT HIP CORNER GIRDER W/ NAILING OPTION FOR NAILING PATTERN	MIN. 2x6 X 24" BEARING BLOCK NAILED TO VERT. SIDE IN MASTER GIRDER TRUSS W/ (10) 16d NAILS. AT BOTH HIP CORNER GIRDERS USE (3) 16d TOE NAILS AT TOP CHORD TO TOP CHORD

JACK/GIRDER CONVENTIONAL HIP FARMING — SCALE: 1" = 1'-0" — REV-31-03 BAI — BAI NO.: SPR9815AZ — 6

(1 THRU 5)

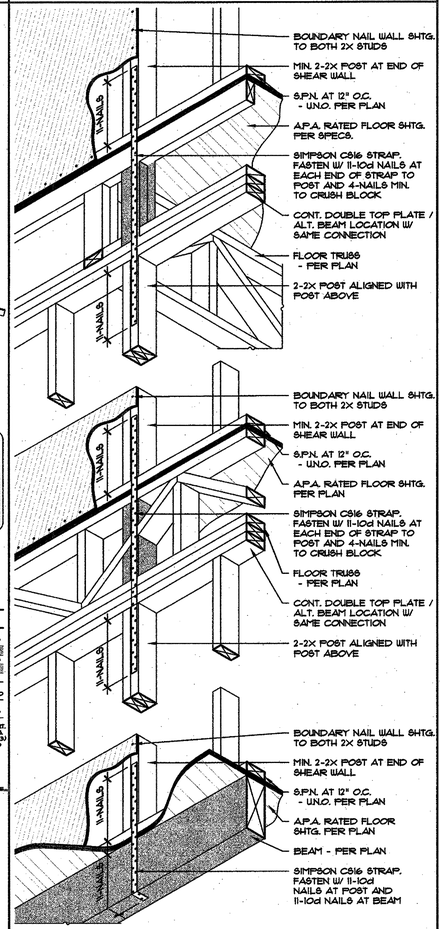

STRAP DOWN — SCALE: 1" = 1'-0" — REV-01-04 BAI — BAI NO.: SCH0101AZ — 1

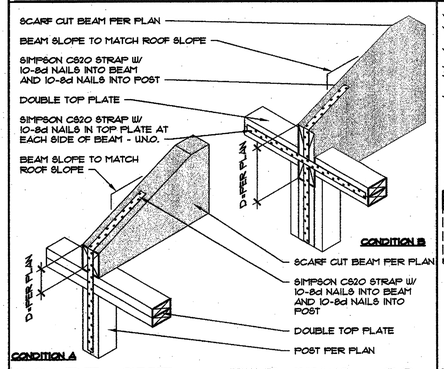

SCARF CUT BEAM TO POST — SCALE: 1" = 1'-0" — REV-18-04 BAI — BAI NO. 1336N3AZ — 22

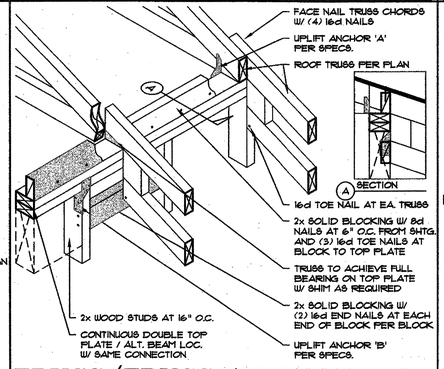

TRUSS/TRUSS W/ PARALLEL CHORDS — SCALE: 1" = 1'-0" — REV-30-03 BAI — BAI NO.: SPR9808AZ — 17

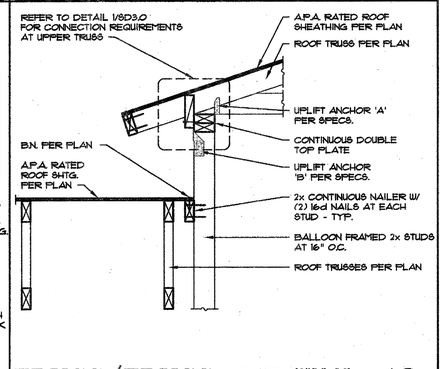

TRUSS/TRUSS AT ENTRY PERP. — SCALE: 1" = 1'-0" — REV-06-03 BAI — BAI NO.: SPR9813AZ — 12

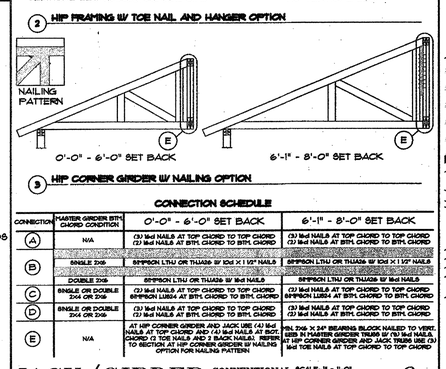

CONNECTION SCHEDULE

CONNECTION	MASTER GIRDER BTM. CHORD CONDITION	0'-0" - 6'-0" SET BACK	6'-1" - 8'-0" SET BACK
A	N/A	(3) 16d NAILS AT TOP CHORD TO TOP CHORD (3) 16d NAILS AT BTM. CHORD TO BTM. CHORD	(3) 16d NAILS AT TOP CHORD TO TOP CHORD (3) 16d NAILS AT BTM. CHORD TO BTM. CHORD
B	SINGLE 2x6	SIMPSON THJA26 W/ (4) 10d X 1 1/2" NAILS - BEND CENTER TAB DOWN FOR CENTER JACK	SIMPSON THJA26 W/ (4) 10d X 1 1/2" NAILS - BEND CENTER TAB DOWN FOR CENTER JACK
	DOUBLE 2x6	SIMPSON THJA26 W/ 16d NAILS - BEND CENTER TAB DOWN FOR CENTER JACK	SIMPSON THJA26 W/ 16d NAILS - BEND CENTER TAB DOWN FOR CENTER JACK
C	N/A	MIN.2x6 X 24" BEARING BLOCK NAILED TO VERT. SIDE IN MASTER GIRDER TRUSS W/ (8) 16d NAILS. AT BOTH HIP CORNER GIRDERS USE (3) 16d TOE NAILS AT TOP CHORD TO TOP CHORD. AT CENTER JACK TRUSS USE (3) 16d TOE NAILS AT TOP CHORD TO TOP CHORD.	MIN.2x6 X 24" BEARING BLOCK NAILED TO VERT. SIDE IN MASTER GIRDER TRUSS W/ (8) 16d NAILS. AT BOTH HIP CORNER GIRDERS USE (3) 16d TOE NAILS AT TOP CHORD TO TOP CHORD. AT CENTER JACK TRUSS USE (3) 16d TOE NAILS AT TOP CHORD TO TOP CHORD.

JACK/GIRDER TERMINAL HIP FARMING — SCALE: 1" = 1'-0" — REV-31-03 BAI — BAI NO.: SPR9816AZ — 7

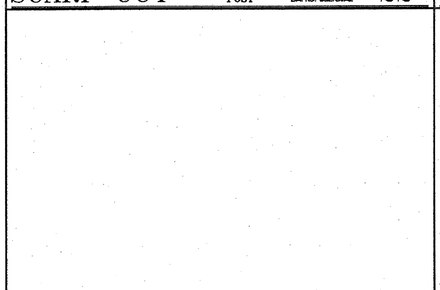

CONNECTION ROOF TRUSS TO WALL — SCALE: 1" = 1'-0" — REV-06-03 BAI — BAI NO.: SPR9813AZ — 18

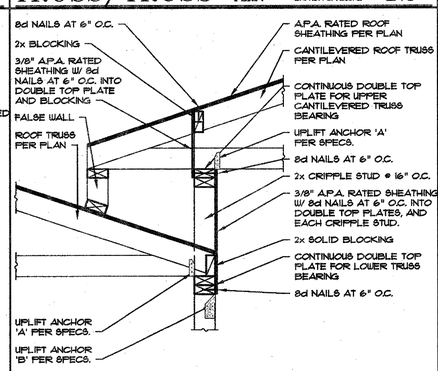

TRUSS/TRUSS CANTILEVERED AT ENTRY PARALLEL — SCALE: 1" = 1'-0" — REV-06-03 BAI — BAI NO.: SPR9815AZ — 13

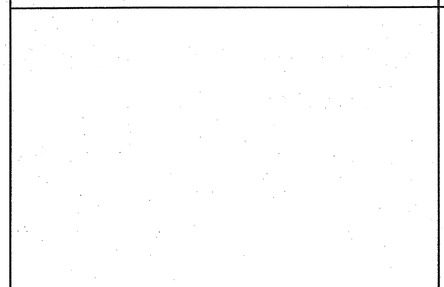

CONNECTION ROOF TRUSS TO WALL — SCALE: 1" = 1'-0" — REV-06-03 BAI — BAI NO.: SPR9812AZ — 19

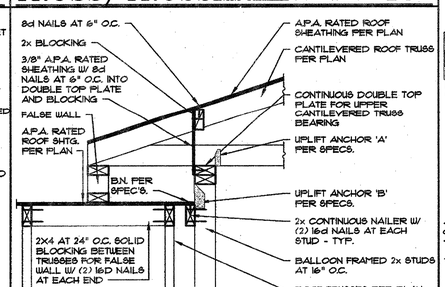

TRUSS/TRUSS CANTILEVERED AT ENTRY PERPEND. — SCALE: 1" = 1'-0" — REV-06-03 BAI — BAI NO.: SPR9814AZ — 14

BORM ENGINEERS
COSTA MESA • BEIJING • DENVER • LAS VEGAS • PHOENIX • TUCSON
PLEASANTON • ROSEVILLE • SACRAMENTO

PHOENIX OFFICE:
13820 North 7th Street, Suite 210
Phoenix, Arizona 85024
(623) 869-0607 Telephone
(623) 869-0609 Facsimile

CORPORATE OFFICE:
555 Anton Boulevard, Suite 850
Costa Mesa, California 92626
(714) 913-7500 Telephone
(714) 913-7555 Facsimile

E-Mail: webmail@borm.com
www.borm.com

COPYRIGHT 2007, BORM ASSOCIATES, INC.
ALL RIGHTS RESERVED

NOTICE:
THESE DRAWINGS AND SPECIFICATIONS AND THE IDEAS, DESIGNS, AND ARRANGEMENTS REPRESENTED THEREBY ARE AND SHALL REMAIN THE PROPERTY OF BORM ASSOCIATES INC. AND NO PART THEREOF SHALL BE COPIED, DISCLOSED TO OTHERS, OR USED IN CONNECTION WITH ANY OTHER WORK OR PROJECT OTHER THAN THE SPECIFIC PROJECT FOR WHICH THEY HAVE BEEN PREPARED AND DEVELOPED WITHOUT THE WRITTEN CONSENT OF BORM ASSOCIATES, INC. VISUAL CONTACT WITH THESE DRAWINGS OR SPECIFICATIONS SHALL CONSTITUTE CONCLUSIVE EVIDENCE OF THESE RESTRICTIONS.

WRITTEN DIMENSIONS ON THESE DRAWINGS SHALL HAVE PRECEDENCE OVER SCALED DIMENSIONS. CONTRACTORS SHALL VERIFY, AND BE RESPONSIBLE FOR ALL DIMENSIONS AND CONDITIONS ON THE JOB. THIS OFFICE MUST BE NOTIFIED OF VARIATIONS FROM THE DIMENSIONS AND CONDITIONS SHOWN BY THESE DRAWINGS.

REFER TO GN SHEETS FOR ALL NOTES AND SPECIFICATIONS

PROJECT:
Broadway at San Marcos

OWNER/DEVELOPER:
Liberty Homes

ARCHITECT/DESIGNER:
MDW Designs

SHEET:
AZ-NV

STRUCTURAL ROOF TRUSS FRAMING DETAILS (1 thru 30)

REFERENCE DATE: 03-28-07

ISSUED FOR:
CLIENT DELIVERY 03-29-07

ENGINEER OF RECORD:
CERTIFICATE NO. 35750 MICHAEL ERIC WILLIS Expires 3-31-07 ARIZONA, U.S.A.

CONTACTS:
-For design questions regarding these plans and specifications contact the Project Manager:
Steve Danner
Telephone: (623) 869-0607 ext. 233
Facsimile: (623) 869-0609
Email: steved@borm.com

-For scheduling site observation and for field changes contact the Construction Administrator:
Alissa Engelby
Telephone: (623) 869-0607 ext. 232
Facsimile: (623) 869-0609
Email: alissa@borm.com

FILE NO: 12564
CAD NO. : SD4.0-AZ-NV
DRAWN BY : KER
ENGINEER : HI
SCALE : 1/4" = 1'-0"
SHT NO. SD4.0