(20 THRU 25)

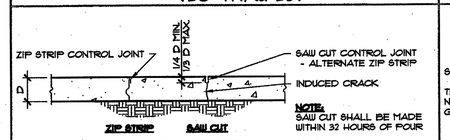

NOTE: SAW CUT SHALL BE MADE WITHIN 32 HOURS OF POUR

SCALE: 1" = 1'-0" ⊙ R02-12-04 BAI BAI NO.: P:\BRM00\DAZ

CONTROL JOINT 21

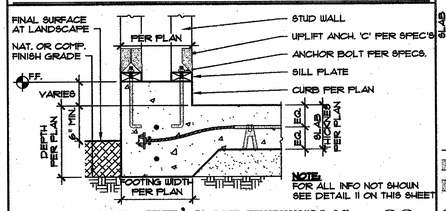

NOTE: FOR ALL INFO NOT SHOWN SEE DETAIL 11 ON THIS SHEET

SCALE: 1" = 1'-0" ⊙ R04-13-04 BAI BAI NO.: P:\BRM00\DAZ

COLUMN FT'G POST TENSION FOUNDATION 22

(15 THRU 19)

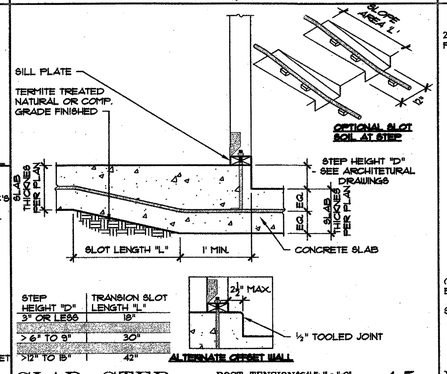

STEP HEIGHT "D"	TRANSION SLOT LENGTH "L"
3" OR LESS	18"
> 6" TO 9"	30"
>12" TO 15"	42"

SCALE: 1" = 1'-0" ⊙ R10-28-04 BAI BAI NO.: P:\BRM00\DAZ

SLAB STEP POST TENSION FOUNDATION 15

(10 THRU 14)

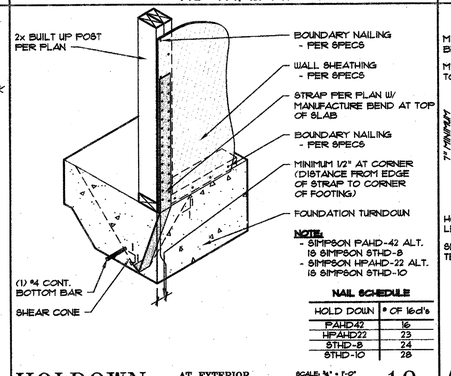

NOTE:
- SIMPSON PAHD-42 ALT. IS SIMPSON STHD-8
- SIMPSON HPAHD-22 ALT. IS SIMPSON STHD-10

NAIL SCHEDULE

HOLD DOWN	# OF 16d's
PAHD-42	16
HPAHD22	23
STHD-8	24
STHD-10	28

SCALE: ¾" = 1'-0" ⊙ R04-8-04 BAI BAI NO.: P:\BRM00\DAZ

HOLDOWN AT EXTERIOR WALL 10

(6 THRU 9)

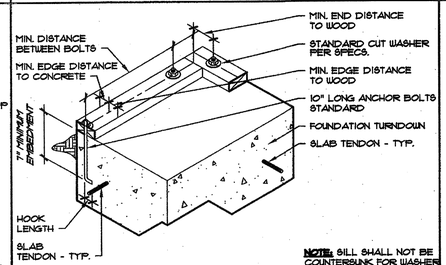

NOTE: SILL SHALL NOT BE COUNTERSUNK FOR WASHER

ANCHOR BOLT SIZE	MINIMUM END DISTANCE	MIN. EDGE DISTANCE to conc.	MIN. EDGE DISTANCE to wood	MINIMUM PLATE SIZE	DISTANCE BETWEEN BOLTS	BORING THROUGH PLATE	HOOK LENGTH
1/2"	3-1/2"	1-1/2"	3/4"	2x4	3"	9/16"	2"-2 1/2"
5/8"	4-3/8"	1-1/8"	1"	2x4	3"	11/16"	2"-2 1/2"
3/4"	5-1/4"	2-1/4"	1-1/8"	2x4	3"	13/16"	2"-2 1/2"
7/8"	6-1/8"	2-3/4"	1-3/8"	2x6	3"	15/16"	3"
1"	7"	3"	1-1/2"	2x6	4"	1-1/16"	3"

SCALE: 1" = 1'-0" ⊙ 04-30-04 BAI BAI NO.: P:\BRM00\DAZ

ANCHOR BOLT POST TENSION FOUNDATION 6

(1 THRU 5)

STANDARD HOOK DIMENSIONS

BAR SIZE US	BAR SIZE METRIC	MIN. PIN DIA	MIN. 90° HOOK LENGTH	MIN. 180° HOOK LENGTH
#3	10mm	2-1/4"	4-1/2"	2-1/2"
#4	13mm	3"	6"	2-1/2"
#5	16mm	3-3/4"	7-1/2"	2-1/2"
#6	19mm	4-1/2"	9"	3"
#7	22mm	5-1/4"	10-1/2"	3-1/2"
#8	25mm	6"	12"	4"

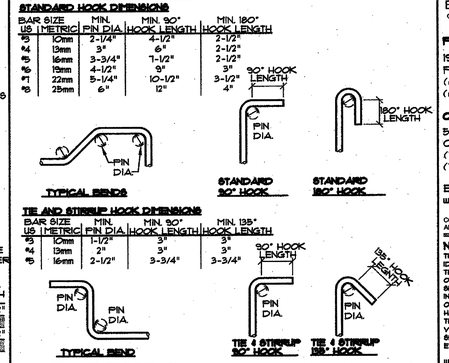

TIE AND STIRRUP HOOK DIMENSIONS

BAR SIZE US	BAR SIZE METRIC	MIN. PIN DIA	MIN. 90° HOOK LENGTH	MIN. 135° HOOK LENGTH
#3	10mm	1-1/2"	3"	3"
#4	13mm	2"	3"	3"
#5	16mm	2-1/2"	3-3/4"	3-3/4"

SCALE: 1" = 1'-0" ⊙ R 5-22-95 BAI BAI NO.: P:\BRM00\DS

BAR BENDS 1

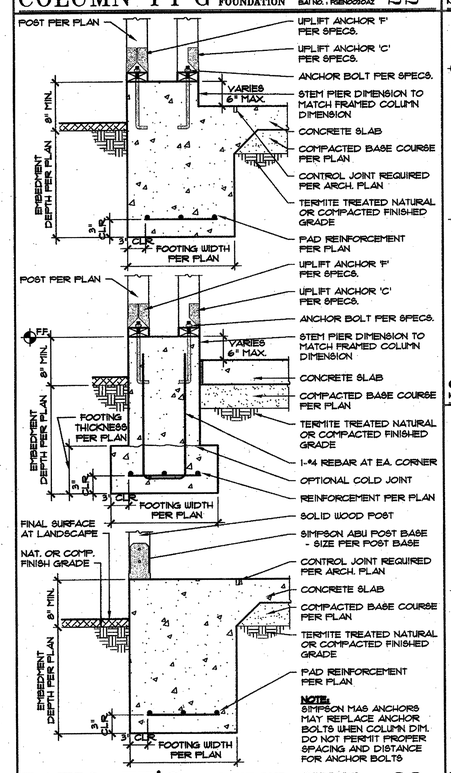

NOTE: SIMPSON MAS ANCHORS MAY REPLACE ANCHOR BOLTS WHEN COLUMN DIM. DO NOT PERMIT PROPER SPACING AND DISTANCE FOR ANCHOR BOLTS

PATIO FT'G AT SOLID POST 23

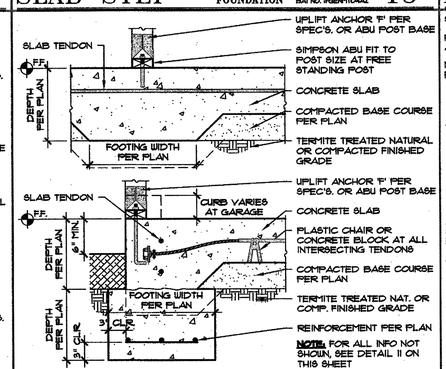

NOTE: FOR ALL INFO NOT SHOWN, SEE DETAIL 11 ON THIS SHEET

SCALE: 1" = 1'-0" ⊙ R02-28-04 BAI BAI NO.: P:\BRM00\DAZ

SPREAD FT'G POST TENSION FOUNDATION 16

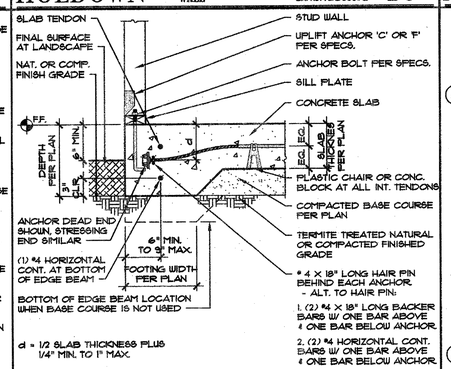

EXT. FOOTING POST TENSION FOUNDATION 11

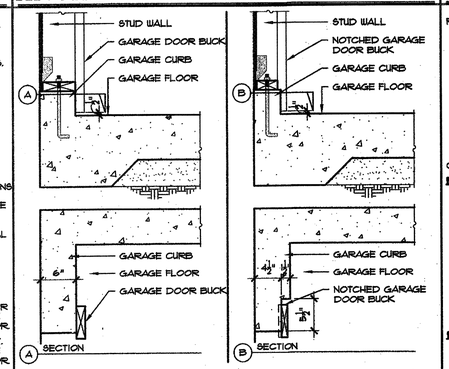

GARAGE BUCK POST TENSION FOUNDATION 7

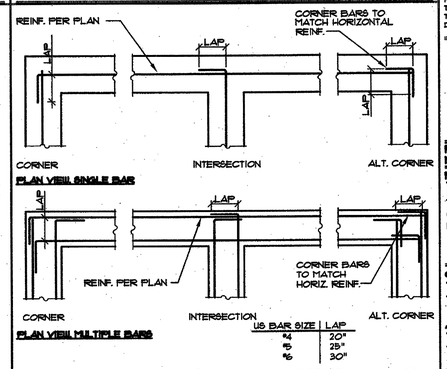

US BAR SIZE	LAP
#4	20"
#5	25"
#6	30"

SCALE: NONE ⊙ 01-23-96 BAI BAI NO.: P:\BRM00\DI

FOOTING REINFORCEMENT AT INTERSECT. & CORNERS 2

NOTE: FOR ALL INFO NOT SHOWN SEE DETAIL 11 ON THIS SHEET

SCALE: 1" = 1'-0" ⊙ R10-28-04 BAI BAI NO.: P:\BRM00\DAZ

UFFER AT MAT FOUNDATION 17

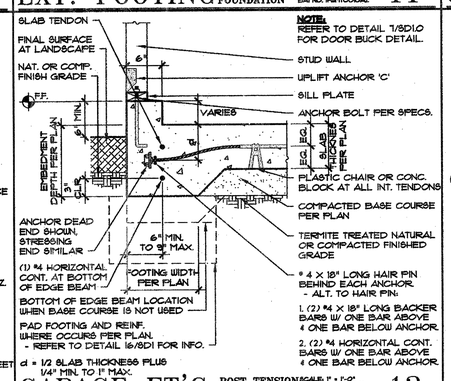

NOTE: REFER TO DETAIL 7/SD1.0 FOR DOOR BUCK DETAIL.

GARAGE FT'G POST TENSION FOUNDATION 12

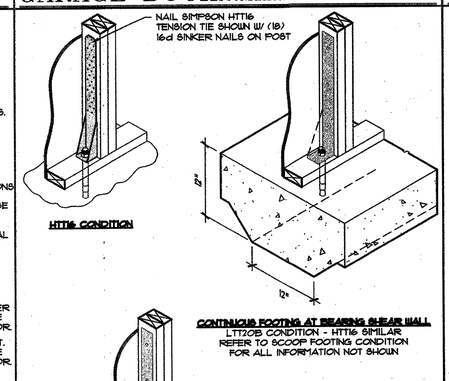

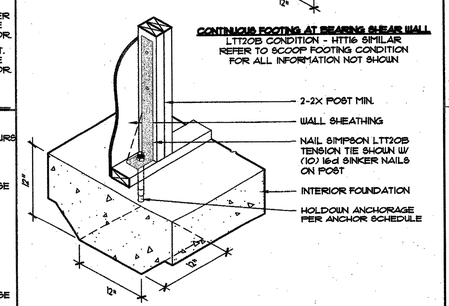

ANCHOR SCHEDULE

HOLDOWN	ANCHOR	MINIMUM EMBED.	ICBO#
LTT20B	5/8" x SIMPSON WEDGE ANCHOR	4 ½"	
	5/8" x SIMPSON TITEN HD	4 ½"	5236
HTT16	5/8" x SIMPSON WEDGE ANCHOR	5 ½"	5236
	5/8" x SIMPSON TITEN HD	4 ½"	5236

NOTE: IF A HOLDOWN IS LOCATED AT A NON BEARING WALL, PROVIDE 2"X2"X2" THICK FOOTINGS AT HOLDOWN LOC.

HOLDOWN AT INTERIOR WALL 8

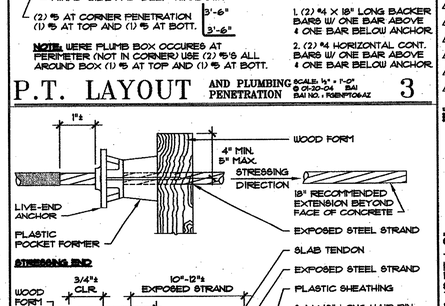

NOTE:
1. AFTER SLAB STRESSING CUT OFF EXCESS TENDON ½" TO ¾" INTO RECESS
2. PRIME PAINT TENDON AND GRIPPER
3. DRY-PACK RECESS

TENDON ANCHOR P.T FOUND. 4

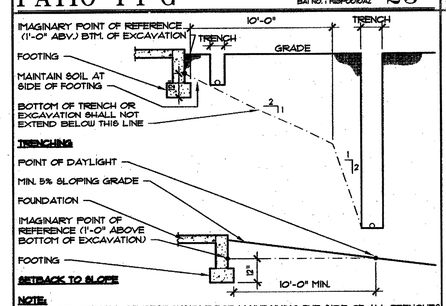

NOTE: CONTRACTOR SHALL BE RESPONSIBLE FOR MAINTAINING THE SIDE OF ALL TRENCHES AND EXCAVATIONS FROM CAVING IN UNTIL ALL BACK FILLING IS COMPLETE. BACK FILL AS REQ'D BY SOILS REPORT OR CIVIL ENGINEER'S DRAWINGS.

CAUTION: THIS DETAIL GIVES NO INDICATION OF SAFE CONSTRUCTION TECHNIQUES W/ RESPECT TO TRENCH OR EXCAVATION STABILITY.

GRADING 24

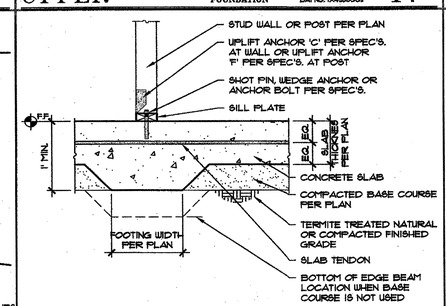

INT. FOOTING MAT FOUNDATION 18

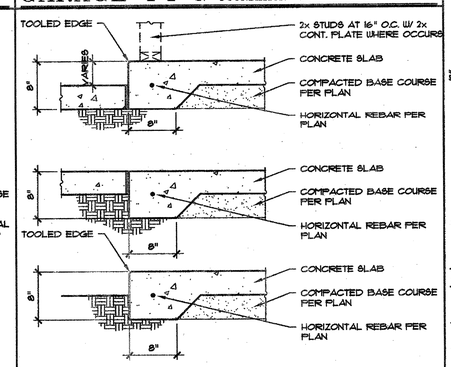

TURNDOWN 13

REFER TO SN SHEETS FOR ALL NOTES AND SPECIFICATIONS

BORM ENGINEERS
COSTA MESA • BEIJING • DENVER • LAS VEGAS • PHOENIX • TUCSON
PLEASANTON • ROSEVILLE • SACRAMENTO

PHOENIX OFFICE:
19820 North 7th Street, Suite 210
Phoenix, Arizona 85024
(623) 869-0607 Telephone
(623) 869-0609 Facsimile

CORPORATE OFFICE:
555 Anton Boulevard, Suite 850
Costa Mesa, California 92626
(714) 513-1500 Telephone
(714) 513-1555 Facsimile

E-Mail: webmail@borm.com
www.borm.com

COPYRIGHT 2007, BORM ASSOCIATES, INC. ALL RIGHTS RESERVED

NOTICE:
THESE DRAWING AND SPECIFICATIONS AND THE IDEAS, DESIGNS, AND ARRANGEMENTS REPRESENTED THEREBY ARE AND SHALL REMAIN THE PROPERTY OF BORM ASSOCIATES INC. AND NO PART THEREOF SHALL BE COPIED, DISCLOSED TO OTHERS, OR USED IN CONNECTION WITH ANY OTHER WORK OR PROJECT OTHER THAN THE SPECIFIC PROJECT FOR WHICH THEY HAVE BEEN PREPARED AND DEVELOPED WITHOUT THE WRITTEN CONSENT OF BORM ASSOCIATES, INC. VISUAL CONTACT WITH THESE DRAWINGS OR SPECIFICATIONS SHALL CONSTITUTE CONCLUSIVE EVIDENCE OF THESE RESTRICTIONS.

WRITTEN DIMENSIONS ON THESE DRAWINGS SHALL HAVE PRECEDENCE OVER SCALED DIMENSIONS. CONTRACTORS SHALL VERIFY, AND ARE RESPONSIBLE FOR ALL DIMENSIONS AND CONDITIONS ON THE JOB. THIS OFFICE MUST BE NOTIFIED OF VARIATIONS FROM THE DIMENSIONS AND CONDITIONS SHOWN BY THESE DRAWINGS.

PROJECT:
Broadway at San Marcos

OWNER/DEVELOPER:
Liberty Homes

ARCHITECT/DESIGNER:
MDW Designs

SHEET:
1 POUR POST TENSION FOUNDATION DETAILS (1 thru 30)

REFERENCE DATE: 03-28-07

ISSUED FOR:

CLIENT DELIVERY	03-28-07
△	
△	
△	
△	
△	
△	
△	
△	
△	

ENGINEER OF RECORD:

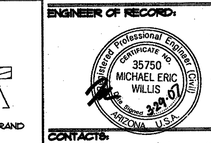

CONTACTS:
-For design questions regarding these plans and specifications contact the Project Manager:
Steve Danner
Telephone: (623) 869-0607 ext. 233
Facsimile: (623) 869-0609
Email: steved@borm.com
-For scheduling site observation and for field changes contact the Construction Administrator:
Alisse Engeling
Telephone: (623) 869-0607 ext. 232
Facsimile: (623) 869-0609
Email: alisse@borm.com

FILE NO: 12564
CAD NO.: 12564 SD1-0
DRAWN BY: KER
ENGINEER: HI
SCALE: ¼" = 1'-0"

SHT NO. SD1.0