(21 THRU 25)

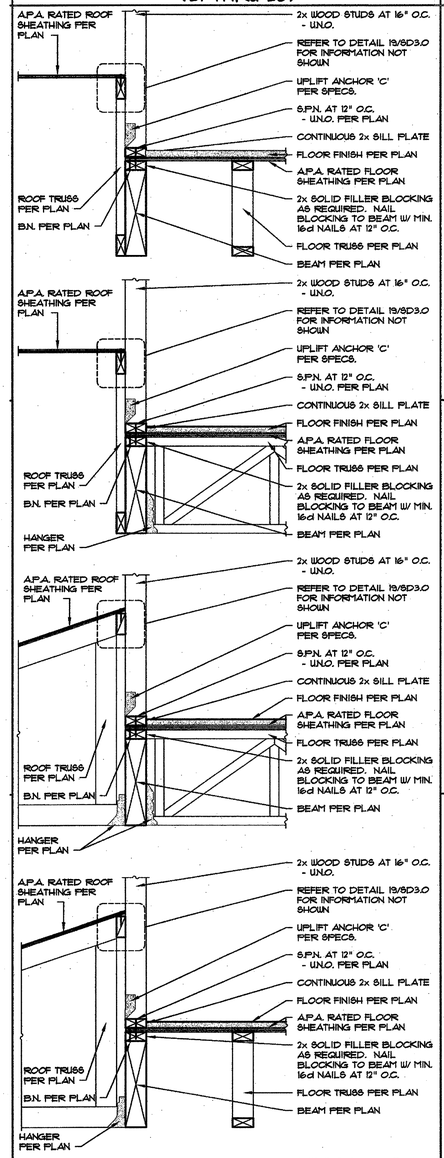

ROOF TRUSS AT FLOOR TRUSS AT BEAM — SCALE: 1" = 1'-0" — © R10-30-03 BJM — BJM NO.: 1SPR8GGAZ 2 — **21**

(16 THRU 20)

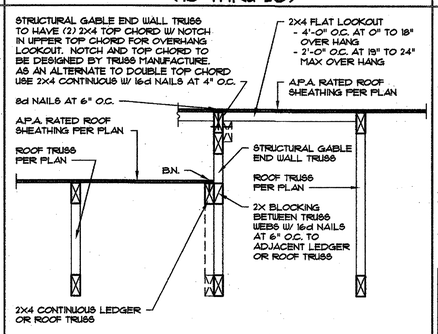

OFFSET GABLE — END ROOF TRUSS — SCALE: 1" = 1'-0" — © R11-06-03 BJM — BJM NO.: 1SPR8SDAZ — **16**

(11 THRU 15)

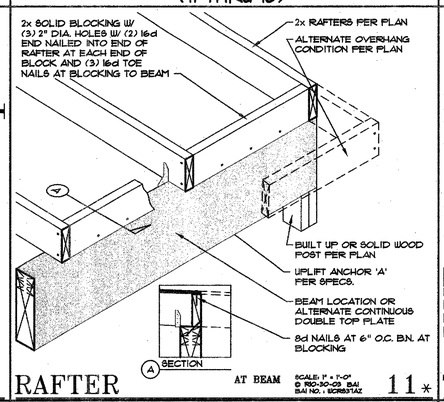

RAFTER AT BEAM — SCALE: 1" = 1'-0" — © R10-30-03 BJM — BJM NO.: 1SPR8SDAZ — **11***

(6 THRU 10)

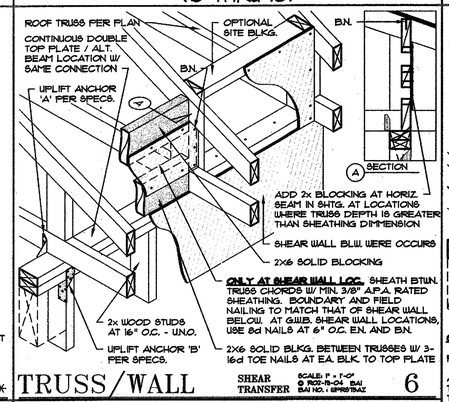

TRUSS/WALL — SHEAR TRANSFER — SCALE: 1" = 1'-0" — © R10-19-04 BJM — BJM NO.: 1SPR8TBAZ — **6**

(1 THRU 5)

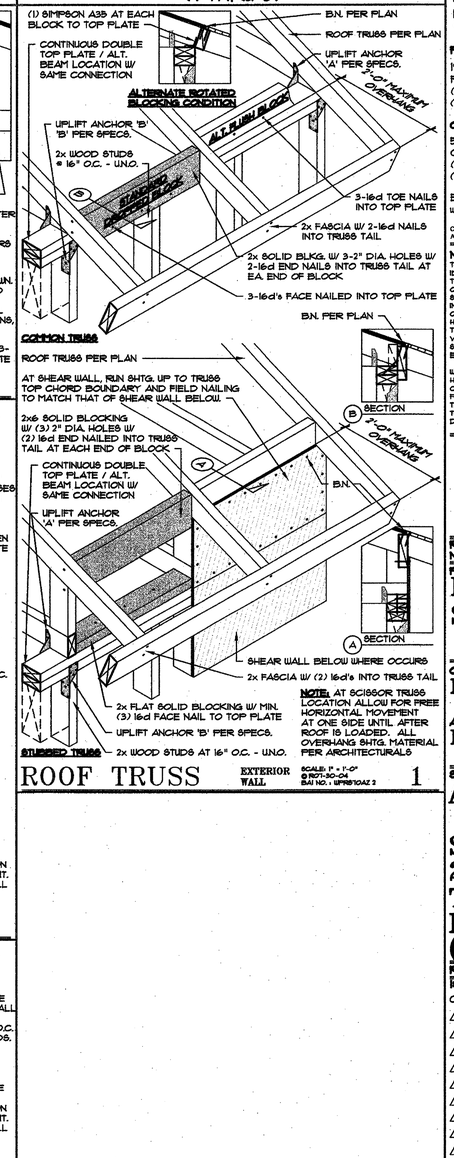

NOTE: AT SC1880R TRUSS LOCATION ALLOW FOR FREE HORIZONTAL MOVEMENT AT ONE SIDE UNTIL AFTER ROOF IS LOADED. ALL OVERHANG SHTG. MATERIAL PER ARCHITECTURALS

ROOF TRUSS — EXTERIOR WALL — SCALE: 1" = 1'-0" — © R07-30-04 — BJM NO.: 1SPR8YGAZ 2 — **1**

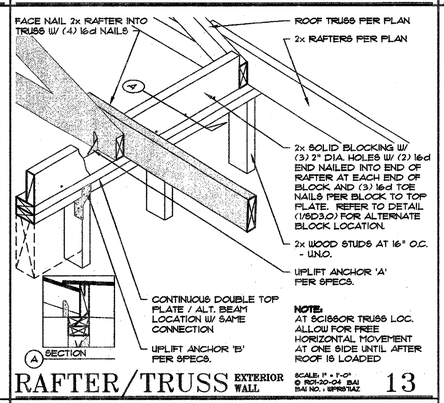

NOTE: AT SC1880R TRUSS LOC. ALLOW FOR FREE HORIZONTAL MOVEMENT AT ONE SIDE UNTIL AFTER ROOF IS LOADED

RAFTER/TRUSS — EXTERIOR WALL — SCALE: 1" = 1'-0" — © R01-30-04 BJM — BJM NO.: 1SPR8TBAZ — **13**

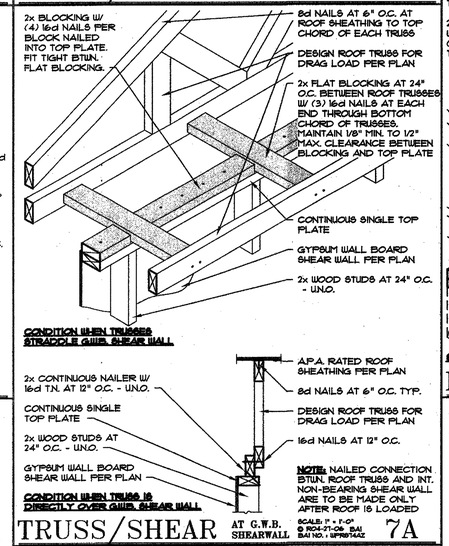

NOTE: NAILED CONNECTION BTWN. ROOF TRUSS AND INT. NON-BEARING SHEAR WALL ARE TO BE MADE ONLY AFTER ROOF IS LOADED

TRUSS/SHEAR — AT G.W.B. SHEARWALL — SCALE: 1" = 1'-0" — © R04-21-06 BJM — BJM NO.: 1SPR8T4AZ — **7A**

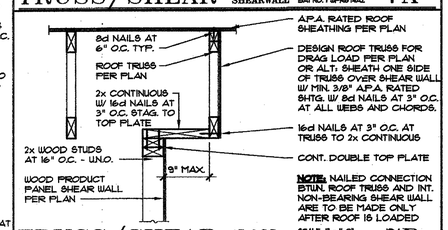

NOTE: NAILED CONNECTION BTWN. ROOF TRUSS AND INT. NON-BEARING SHEAR WALL ARE TO BE MADE ONLY AFTER ROOF IS LOADED

TRUSS/SHEAR — AT O.S.B. SHEARWALL — SCALE: 1" = 1'-0" — © R04-21-06 BJM — BJM NO.: 1SPR8T5AZ — **7B**

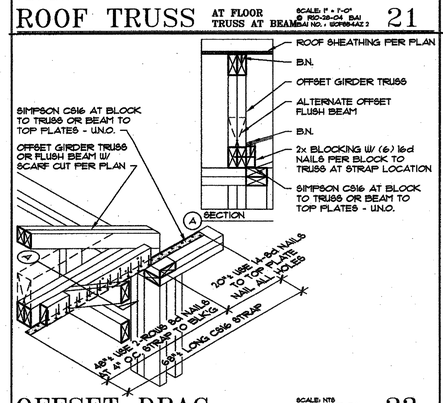

OFFSET DRAG — SCALE: NTS — © R10-30-03 BJM — BJM NO.: 1SPR8GGAZ — **23**

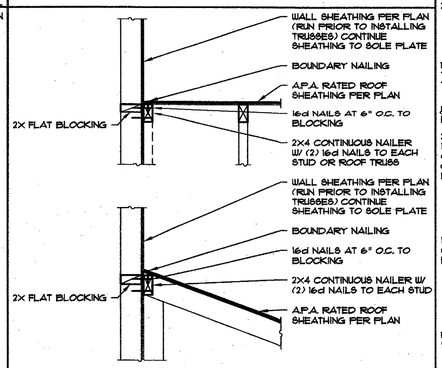

ROOF TRANSFER — SCALE: 1" = 1'-0" — © R11-06-03 BJM — BJM NO.: 1SPR8SDAZ — **19**

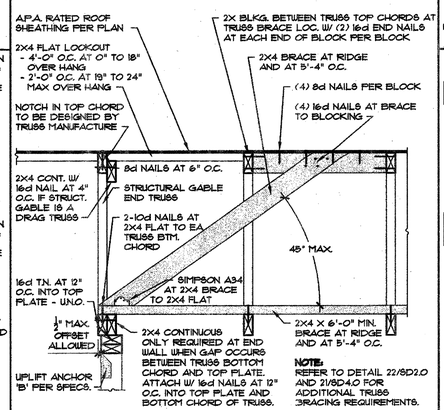

NOTE: REFER TO DETAIL 22/SD2.0 AND 21/SD4.0 FOR ADDITIONAL TRUSS BRACING REQUIREMENTS.

GABLE END BRACE — SCALE: 1" = 1'-0" — © R05-18-04 BJM — BJM NO.: 1SPR8GGAZ — **14**

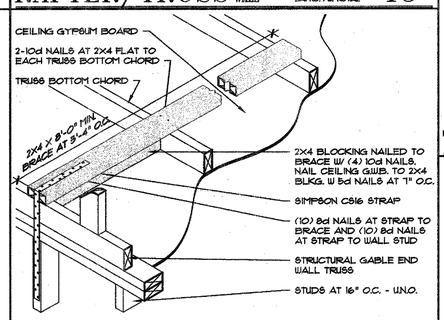

ALTERNATE CONDITION

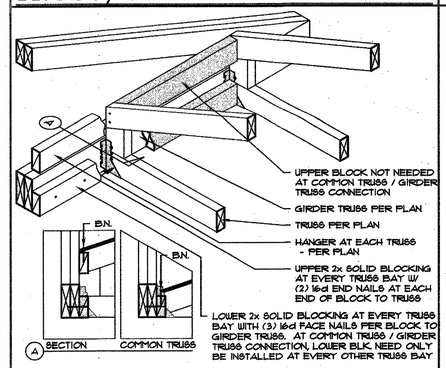

TRUSS — AT GIRDER TRUSS — SCALE: 1" = 1'-0" — © R02-18-04 BJM — BJM NO.: 1SPR8TSAZ — **8**

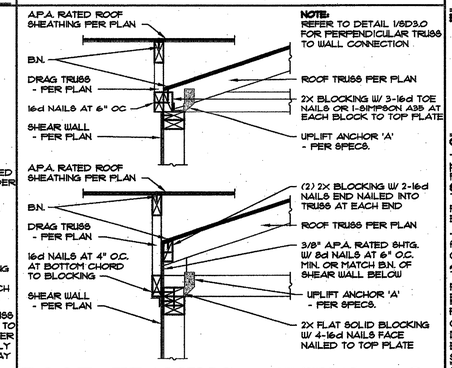

NOTE: REFER TO DETAIL 1/SD3.0 FOR PERPENDICULAR TRUSS TO WALL CONNECTION

ROOF FRAMING — AT GIRDER TRUSS — SCALE: 1" = 1'-0" — © R02-07-06 BJM — BJM NO.: 1SPR8T7AZ — **3**

BORM ENGINEERS
COSTA MESA • BEIJING • DENVER • LAS VEGAS • PHOENIX • TUCSON
PLEASANTON • ROSEVILLE • SACRAMENTO

PHOENIX OFFICE:
19820 North 7th Street, Suite 210
Phoenix, Arizona 85024
(623) 869-0601 Telephone
(623) 869-0609 Facsimile

CORPORATE OFFICE:
555 Anton Boulevard, Suite 850
Costa Mesa, California 92626
(714) 513-7500 Telephone
(714) 513-7555 Facsimile

E-Mail: webmail@borm.com
www.borm.com

COPYRIGHT 2007, BORM ASSOCIATES, INC.
ALL RIGHTS RESERVED

NOTICE:
THESE DRAWING AND SPECIFICATIONS AND THE IDEAS, DESIGNS, AND ARRANGEMENTS REPRESENTED THEREBY ARE AND SHALL REMAIN THE PROPERTY OF BORM ASSOCIATES INC. AND NO PART THEREOF SHALL BE COPIED, DISCLOSED TO OTHERS, OR USED IN CONNECTION WITH ANY OTHER WORK OR PROJECT OTHER THAN THE SPECIFIC PROJECT FOR WHICH THEY HAVE BEEN PREPARED AND DEVELOPED WITHOUT THE WRITTEN CONSENT OF BORM ASSOCIATES, INC. VISUAL CONTACT WITH THESE DRAWINGS OR SPECIFICATIONS SHALL CONSTITUTE CONCLUSIVE EVIDENCE OF THESE RESTRICTIONS.

WRITTEN DIMENSIONS ON THESE DRAWINGS SHALL HAVE PRECEDENCE OVER SCALED DIMENSIONS. CONTRACTORS SHALL VERIFY, AND BE RESPONSIBLE FOR ALL DIMENSIONS AND CONDITIONS ON THE JOB. THIS OFFICE MUST BE NOTIFIED OF VARIATIONS FROM THE DIMENSIONS AND CONDITIONS SHOWN BY THESE DRAWINGS.

REFER TO SN SHEETS FOR ALL NOTES AND SPECIFICATIONS

PROJECT:
Broadway at San Marcos

OWNER/DEVELOPER:
Liberty Homes

ARCHITECT/DESIGNER:
MDW Designs

SHEET:
AZ-NV

STRUCTURAL 2X ROOF TRUSS DETAILS (1 thru 30)

REFERENCE DATE: 03-28-07

ISSUED FOR:
CLIENT DELIVERY 03-29-07

ENGINEER OF RECORD:
REGISTERED PROFESSIONAL ENGINEER (Civil) — CERTIFICATE NO. 35750 — MICHAEL ERIC WILLIS — Date Signed 3-29-07 — ARIZONA, U.S.A.

CONTACTS:
-For design questions regarding these plans and specifications contact the Project Manager:
Steve Danner
Telephone: (623) 869-0607 ext. 233
Facsimile: (623) 869-0609
Email: steved@borm.com
-For scheduling site observation and for field changes contact the Construction Administrator:
Alissa Engelke
Telephone: (623) 869-0607 ext. 232
Facsimile: (623) 869-0609
Email: alissae@borm.com

FILE NO: 12564
CAD NO. : 12564 SD3-0
DRAWN BY : KER
ENGINEER : HI
SCALE : ½" = 1'-0"
SHT NO. SD3.0